Hall Stage
PURVEYORS OF INNOVATIVE ENGINEERING SINCE 1898
Unit 4, Cosgrove Way, Luton, Beds, LU1 1XL
Tel: 0845 345 4255 Fax: 0845 345 4256
sales@hallstage.com www.hallstage.com

T400 Track Details

The compact T400 Curtain Track System has been designed as a light duty track, most suitable for use with smaller stages and large windows.

Other areas in which this curtain track system has proved it's versatility are in small television and video studio cycloramas, especially where chromakey double tracks are required in a restricted area, school drama, auditorium windows and also crematoria curtains.

The method of working the Compact T400 Curtain Track may be either electric controller, handwinch, handline or walkalong methods.

Manufactured from steel and electrically welded, this track is available in a standard range of straight and curved track sections from which it is possible to construct an infinite range of track configurations, all joints being interchangeable. Slides for the Compact T400 Track have a maximum loading capability of 1.70 kilos and these should be spaced at 200mm intervals along the curtain head length of track.

The recommended maximum length of track in normal use is 10 metres, this figure applies to both single and overlapped tracks.

Hall Stage
PURVEYORS OF INNOVATIVE ENGINEERING SINCE 1898
Unit 4, Cosgrove Way, Luton, Beds, LU1 1XL
Tel: 0845 345 4255 Fax: 0845 345 4256
sales@hallstage.com www.hallstage.com

T400 Curtain Track

A T400 Handline Head Pulley
B T400 Face Fixing Bracket
C T400 Stop Bracket
D T400 Stud Fixing Saddle
E T400 M8 x 150mm Stud
F T400 Return Pulley
G T400 Cable Head Pulley
H T400 Overlap Clip
J T400 Line Guide

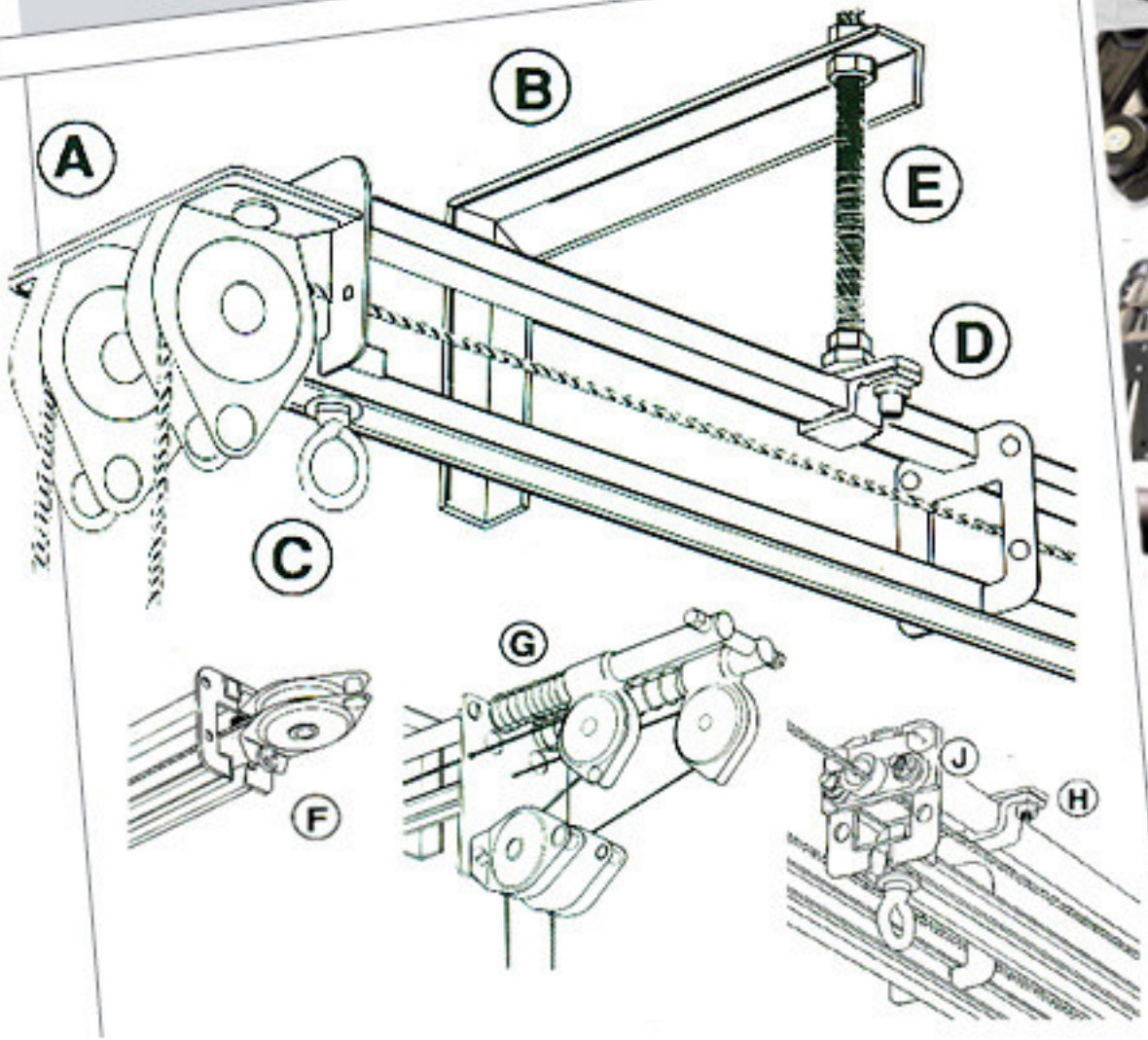

T400 Track Systems

Hall Stage
PURVEYORS OF INNOVATIVE ENGINEERING SINCE 1898
Unit 4, Cosgrove Way, Luton, Beds, LU1 1XL
Tel: 0845 345 4255 Fax: 0845 345 4256
sales@hallstage.com www.hallstage.com

A) T400 Curve Guide Roller
B) T400 Slider Carrier
C) Curve Guide Rail
D) T400 Slider Leader
E) T400 Top Fixing Saddle

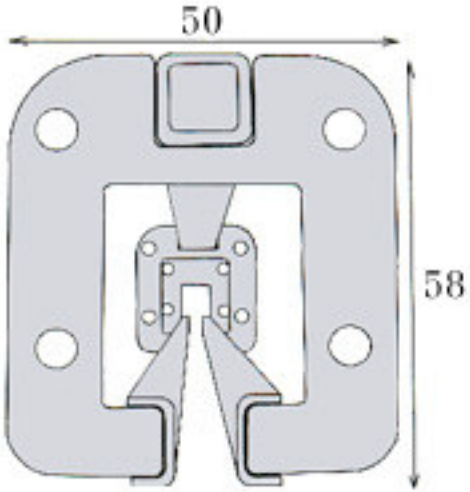

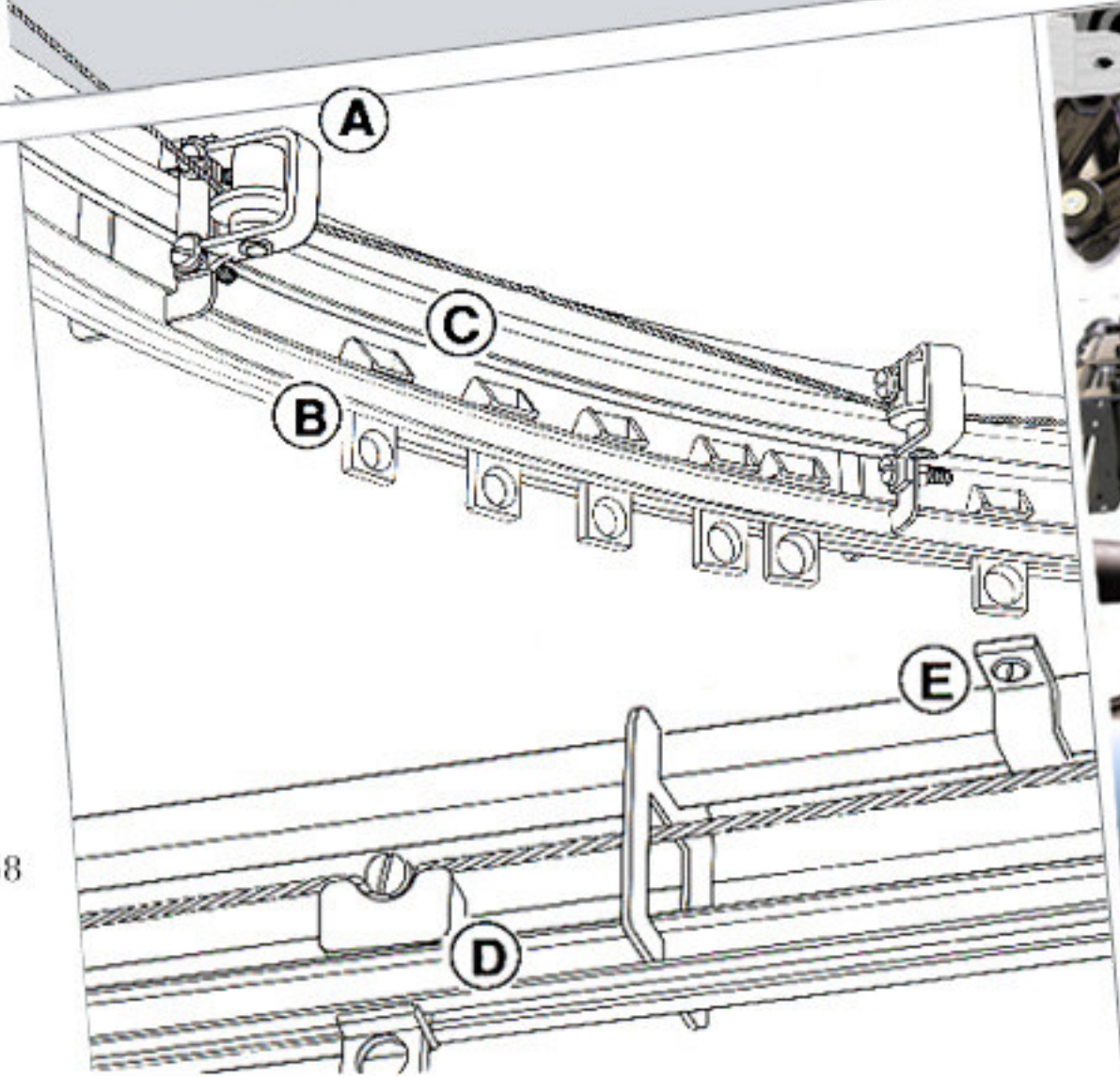

Hall Stage
PURVEYORS OF INNOVATIVE ENGINEERING SINCE 1898
Unit 4, Cosgrove Way, Luton, Beds, LU1 1XL
Tel :0845 345 4255 Fax: 0845 345 4256
sales@hallstage.com www.hallstage.com

T400 Track Dimensions

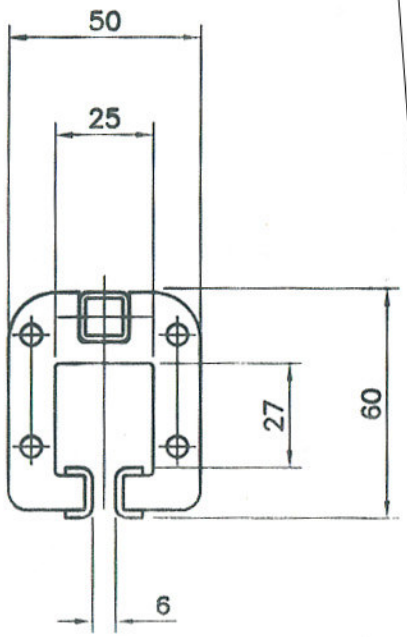

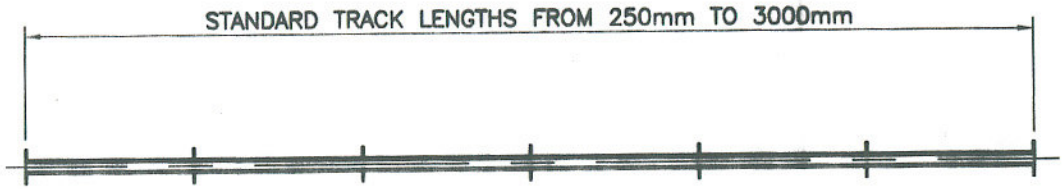

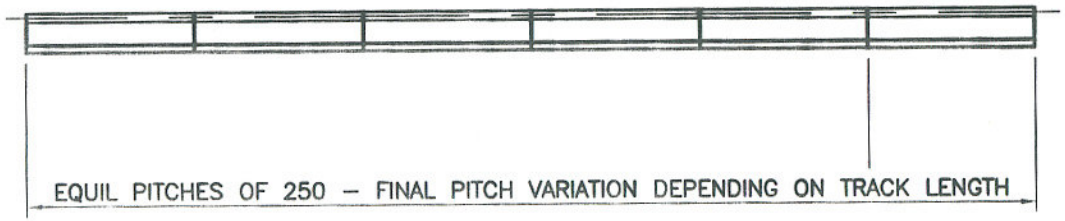

Hall Stage
PURVEYORS OF INNOVATIVE ENGINEERING SINCE 1898
Unit 4, Cosgrove Way, Luton, Beds, LU1 1XL
Tel: 0845 345 4255 Fax: 0845 345 4256
sales@hallstage.com www.hallstage.com

T400 Mounting Details

Standard Fixing Arrangements

A standard range of suspension fittings are manufactured for use with the Compact T400 Track System. In most cases they allow for final curtain height adjustment, particularly useful where fabric is inclined to shrink or drop following cleaning.

All suspension fittings should be spaced at intervals not exceeding 1.5 metre along the legth of the track and 1.00 metre where the bunched curtain is stored.

Any fixing required which is not covered by our standard range can be easily fabricated to order.

Hall Stage
PURVEYORS OF INNOVATIVE ENGINEERING SINCE 1998
Unit 4, Cosgrove Way, Luton, Beds, LU1 1XL
Tel: 0845 345 4255 Fax: 0845 345 4256
sales@hallstage.com www.hallstage.com

T400 Mounting Details

G) T400 M8 x 150mm Stud
H) T400 Stud Fixing Saddle
J) T400 Tube Fixing Clip
K) 4mm 6/19 Steel Wire Rope
L) T400 Girder Fixing Clamp
M) T400 Dead Line Suspension Clip

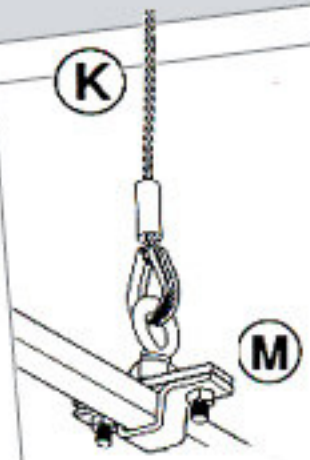

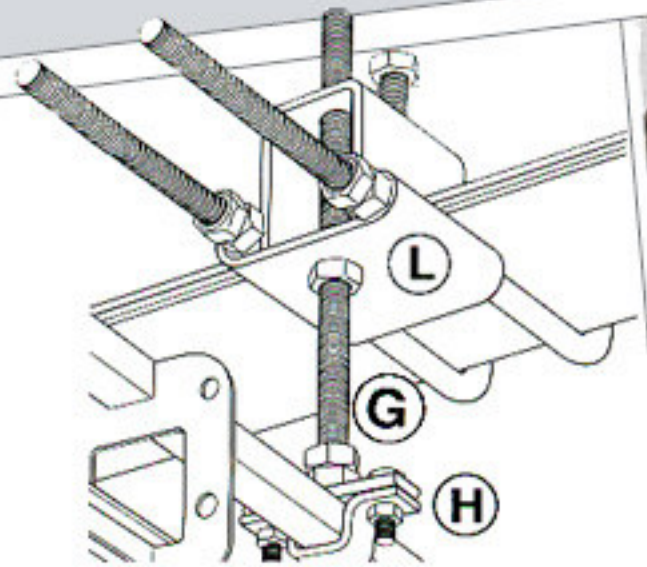

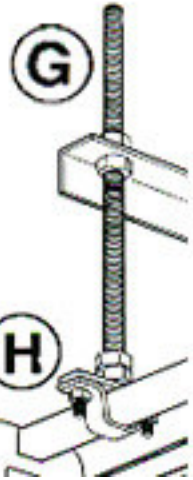

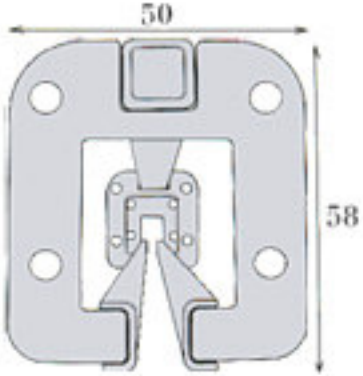

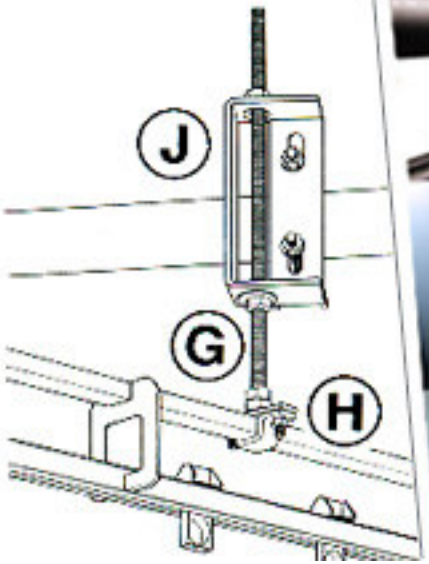

Hall Stage
PURVEYORS OF INNOVATIVE ENGINEERING SINCE 1898
Unit 4, Cosgrove Way, Luton, Beds, LU1 1XL
Tel: 0845 345 4255 Fax: 0845 345 4256
sales@hallstage.com www.hallstage.com

T400 Mounting Details

A) Degree of adjustment Between 15mm - 130mm
B) T400 M8 x 150mm Stud
C) T400 Stud Fixing Saddle
D) M8 Clearance Hole
E) T400 Face Fixing Bracket
F) Recommended Ceiling Recess For Tracks
G) Recommended Clearance For Curtains

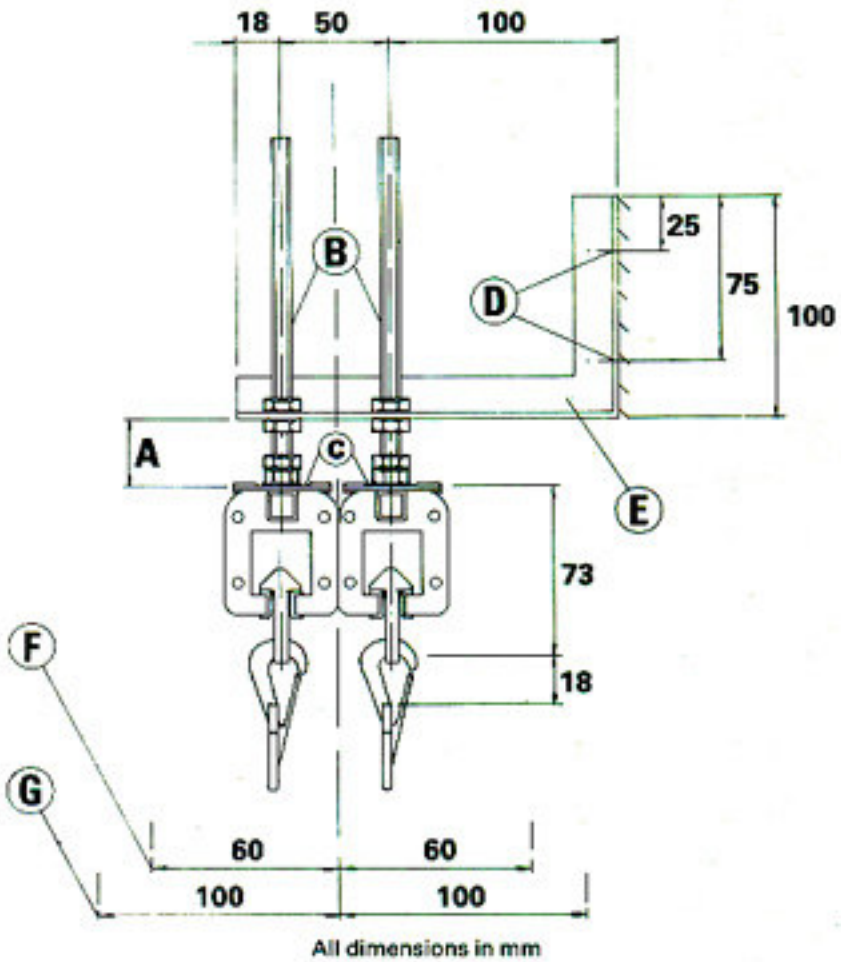

T400 Handline Track Assembly Diagram

Hall Stage
PURVEYORS OF INNOVATIVE ENGINEERING SINCE 1898
Unit 4, Cosgrove Way, Luton, Beds, LU1 1XL
Tel: 0845 345 4255 Fax: 0845 345 4256
sales@hallstage.com www.hallstage.com

A) T400 Straight Section
B) T400 M8 x 150mm Stud
C) T400 Stud Fixing Saddle
D) T400 Overlap Clip
E) T400 End Stop
F) End Stop Eye
G) T400 Line Guide Plate
H) T400 Line Guide
I) T400 Slider Leader
J) T400 Slider Carrier
K) T400 Return Pulley Plate
L) T400 Sash Head Pulley Plate
M) 38mm Dia Single Pulley
N) T400 Face Fixing Bracket

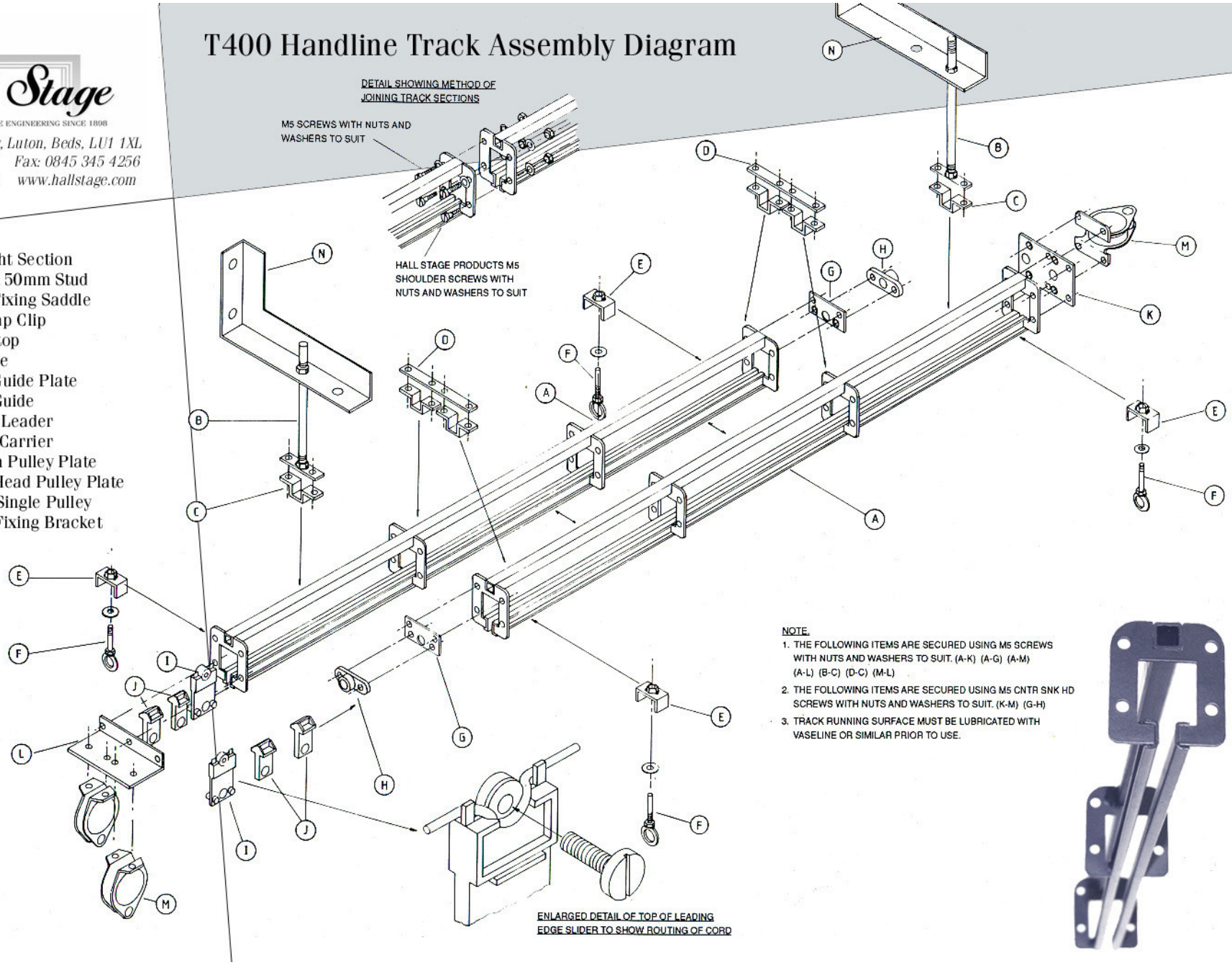

NOTE.

1. THE FOLLOWING ITEMS ARE SECURED USING M5 SCREWS WITH NUTS AND WASHERS TO SUIT. (A-K) (A-G) (A-M) (A-L) (B-C) (D-C) (M-L)
2. THE FOLLOWING ITEMS ARE SECURED USING M5 CNTR SNK HD SCREWS WITH NUTS AND WASHERS TO SUIT. (K-M) (G-H)
3. TRACK RUNNING SURFACE MUST BE LUBRICATED WITH VASELINE OR SIMILAR PRIOR TO USE.

T400 Cable Track Assembley Diagram

Hall Stage
PURVEYORS OF INNOVATIVE ENGINEERING SINCE 1898
Unit 4, Cosgrove Way, Luton, Beds, LU1 1XL
Tel: 0845 345 4255 Fax: 0845 345 4256
sales@hallstage.com www.hallstage.com

A) T400 Straight Section
B) T400 M8 x 150mm Stud
C) T400 Stud Fixing Saddle
D) T400 Overlap Clip
E) T400 End Stop
F) End Stop Eye
G) T400 Line Guide Plate
H) T400 Line Guide
I) T400 Slider Leader
J) T400 Slider Carrier
K) T400 Return Pulley Plate
L) 38mm Dia Single Pulley
M) T400 Cable Head Pulley
N) T400 Face Fixing Bracket

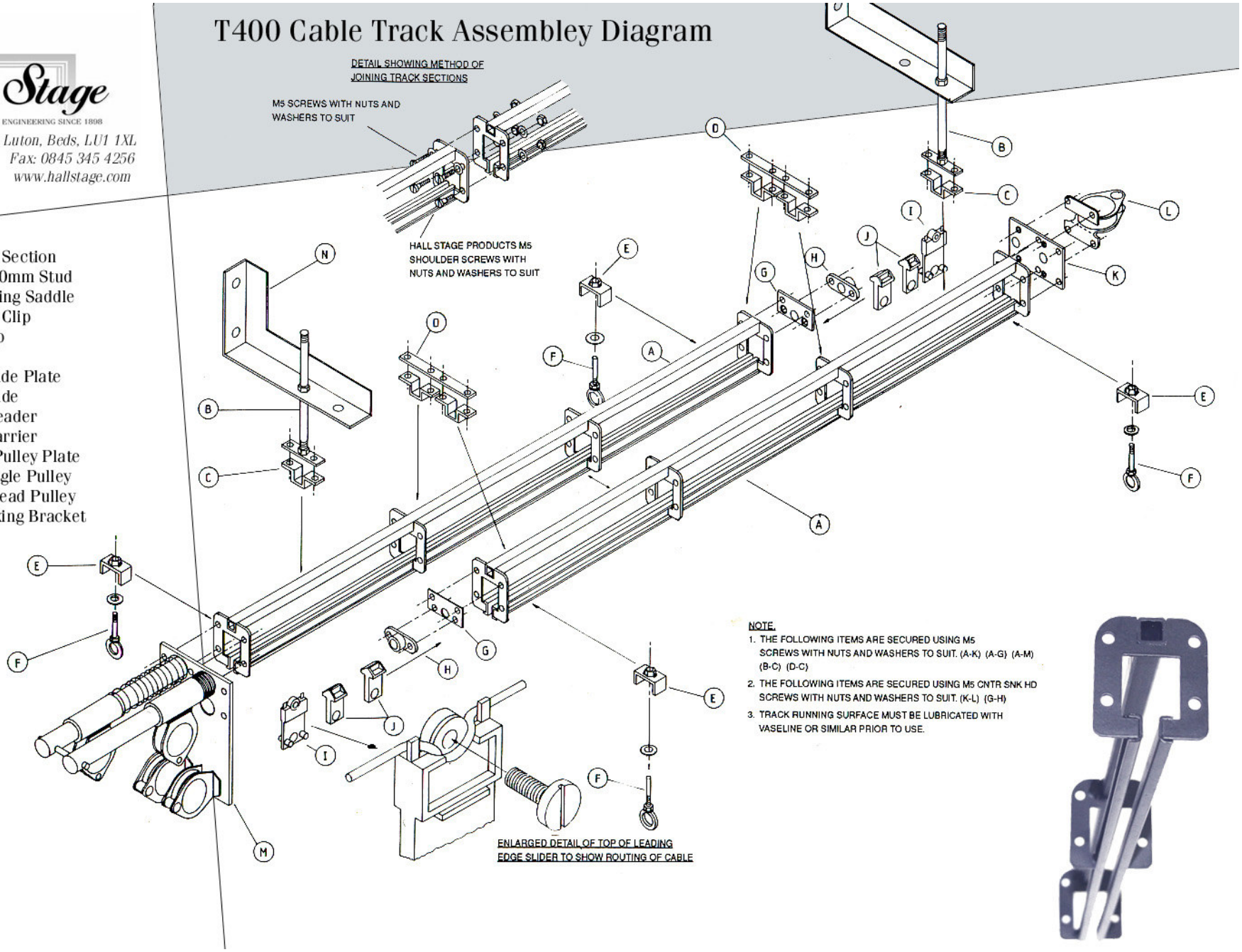

NOTE.

1. THE FOLLOWING ITEMS ARE SECURED USING M5 SCREWS WITH NUTS AND WASHERS TO SUIT. (A-K) (A-G) (A-M) (B-C) (D-C)
2. THE FOLLOWING ITEMS ARE SECURED USING M5 CNTR SNK HD SCREWS WITH NUTS AND WASHERS TO SUIT. (K-L) (G-H)
3. TRACK RUNNING SURFACE MUST BE LUBRICATED WITH VASELINE OR SIMILAR PRIOR TO USE.